WUDWARE

Designed in italy

Drawer Accessories

www.wudware.in

Modular Cutlery Tray

Single Wing 10-20
Code: MCT 1020SW

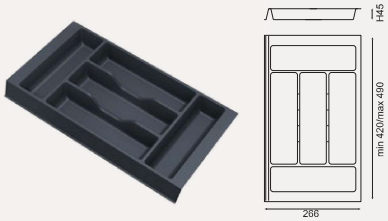

Double Wing 11-20
Code: MCT 1120DW

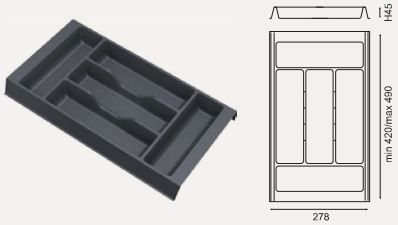

Single Wing 15-20
Code: MCT 1520SW

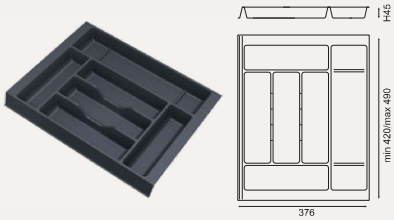

Single Wing 9-20
Code: MCT 920SW

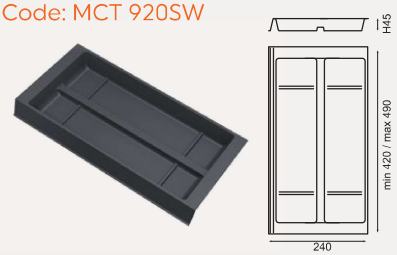

Knife Block
Code: MCT - KB2

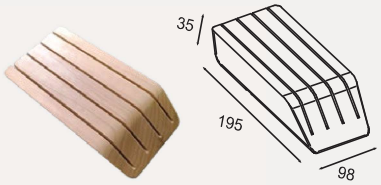

Cutting Board
Code: MCT - CB2

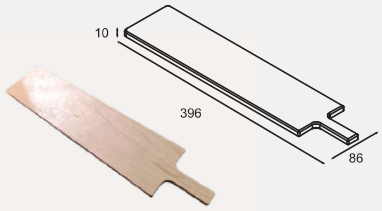

Drawer Partition Kitchen (Ht: 60mm/48mm)

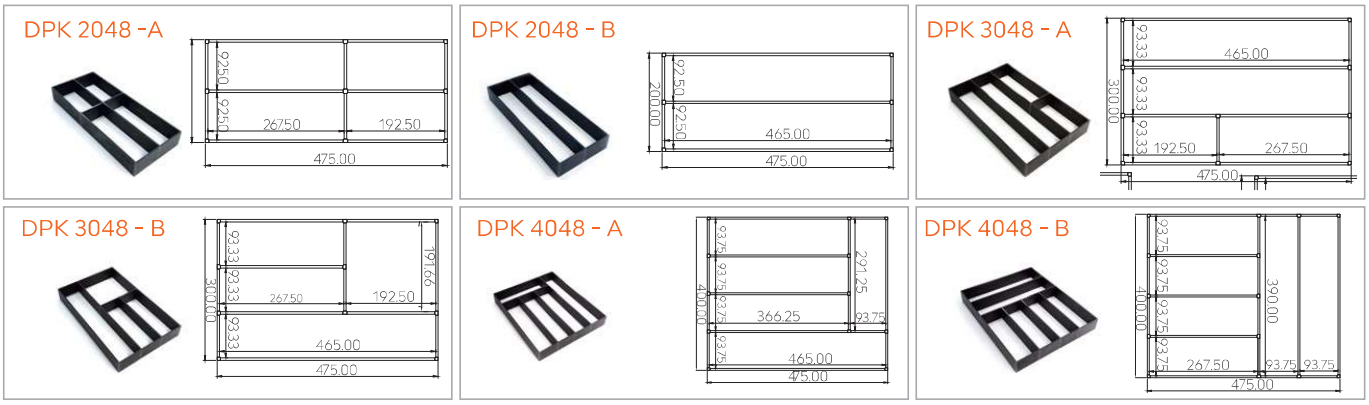

Drawer Plate Organiser
(With End Cover)

Kitchen Cutlery Tray

Kitchen Cutlery Inserts

Kitchen Drawer Rack - Plate

Kitchen Drawer Rack - Thali

Plastic Wicker Basket

- Idea for storing fruits and vegetables
- Available with divider
- Reinforced with SS304 rods, these baskets are made of plastic wires that are stable & suitable for all seasons.
- Height: 100, 150 & 200mm
- Width: 450 & 600mm
  (Internal Width: 414 &564mm)
- Depth -500mm
- Load Capacity: 15 Kgs (Per Basket)
- Finish – BR

Shelf Tray

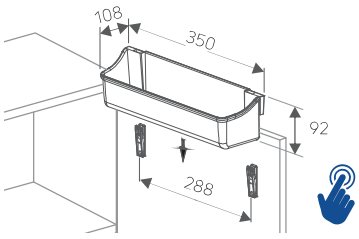

Click here
for video

Blum's practical inner dividing systems organise every drawer and pull-out.

Pots and pans, toiletries and bathroom accessories, everything is where it should be, clear visibility and everything within easy reach.

Storage space can be put to optimal use and interiors tailored to individual needs.

AMBIA-LINE for LEGRABOX | MERIVOBOX

The elegant frames have various uses and bring perfect organisation into any living area.

AMBIA-LINE kitchen accessories

The practical accessories combine beautiful design with practical function.

ORGA-LINE for TANDEMBOX

ORGA-LINE creates impressive order in any drawer or high-fronted pull-out.

ORGA-LINE kitchen accessories

With spice holders, foil | film dispensers and much more, you have everything that you need close at hand. The tools can be quickly cleared away after cooking.

AMBIA-LINE for LEGRABOX | MERIVOBOX

Symbolic image

AMBIA-LINE for LEGRABOX | MERIVOBOX 528
Overview 529

AMBIA-LINE kitchen accessories

Symbolic image

AMBIA-LINE kitchen accessories 538
Order information 539

ORGA-LINE for TANDEMBOX

Symbolic image

ORGA-LINE for TANDEMBOX 540
Overview 541

ORGA-LINE kitchen accessories

Symbolic image

ORGA-LINE kitchen accessories 554
Order information 555

Organisation at its best

The elegant inner dividing system carries the minimalist design through to interiors and beautifully organises furniture throughout the home.
The frames can easily be positioned wherever required and are available in high-quality materials such as coated steel and selected wood décors.
Well-thought-out kitchen accessories such as the spice and plate holder round off this compact range.

Drawer

Steel design

Wood design

AMBIA-LINE drawer frames can be enhanced by using foil | film dispensers and a knife holder.

High fronted pull-out

Steel design

Wood design

The Blum plate holder and spice holder fit perfectly with AMBIA-LINE in steel and wood.

Drawer

Symbolic image

Steel design – frame	530
Wood design – frame	531
Recommendation for drawer | inner drawer	532

High fronted pull-out

Symbolic image

Steel design – frame	533
Steel design – bottles	534
Steel design – cross gallery	535
Wood design – frame	536
Recommendation for high fronted pull-out | inner pull-out	537

Assembly, removal and adjustment

Symbolic image

Assembly, removal and adjustment

Short URL
www.blum.com/a510

Inner dividing systems

Pictograph

Item available on request

Steel design – frame

- Practical for kitchen applications and in other areas of the home
- Elegant, slim design
- Suitable for LEGRABOX drawers and inner pull-out, height M and K
- Suitable for MERIVOBOX drawers and inner pull-out, height M and K
- Can be put in any position and offers secure location
- Cutlery insert with soft touch surface
- Film | foil dispenser and knife holder can be used as an option
- Frame height 50 mm
- Material: steel, powder-coated

Order information

A Cutlery insert

Nominal length NL (mm)	Width (mm)	Colour	Part no.
450	300	SW-M/OG-M | IG-M | OG-M | CS-M	ZC7S450BS3
500	300	SW-M/OG-M | IG-M | OG-M | CS-M	ZC7S500BS3
550	300	SW-M/OG-M | IG-M | OG-M | CS-M	ZC7S550BS3
600	300	SW-M/OG-M | IG-M | OG-M | CS-M	ZC7S600BS3
650	300	SW-M/OG-M | OG-M | CS-M	ZC7S650BS3

B1 Drawer frame – 242 mm

Nominal length NL (mm)	Width (mm)	Colour	Part no.
270–400	242	SW-M | IG-M | OG-M | CS-M	ZC7S300RSU

Incl. magnetic panel for connection to the drawer side or steel back

B2 Adapter profile – connection to chipboard back

Height	Width (mm)	Colour	Part no.
M	242	SW-M | IG-M | OG-M | CS-M	ZC7A0U0M
K	242	SW-M | IG-M | OG-M | CS-M	ZC7A0U0K

Recommendation
From nominal length NL 350 mm

C Drawer frame – 100 mm

Nominal length NL (mm)	Width (mm)	Colour	Part no.
450	100	SW-M | IG-M | OG-M | CS-M	ZC7S450RS1
500	100	SW-M | IG-M | OG-M | CS-M	ZC7S500RS1
550	100	SW-M | IG-M | OG-M | CS-M	ZC7S550RS1
600	100	SW-M | IG-M | OG-M | CS-M	ZC7S600RS1
650	100	SW-M | OG-M | CS-M	ZC7S650RS1

D Drawer frame – 200 mm

Nominal length NL (mm)	Width (mm)	Colour	Part no.
450	200	SW-M | IG-M | OG-M | CS-M	ZC7S450RS2
500	200	SW-M | IG-M | OG-M | CS-M	ZC7S500RS2
550	200	SW-M | IG-M | OG-M | CS-M	ZC7S550RS2
600	200	SW-M | IG-M | OG-M | CS-M	ZC7S600RS2
650	200	SW-M | OG-M | CS-M	ZC7S650RS2

Accessories

Z1 Cross divider

Width (mm)	Height (mm)	Colour	Part no.
100	50	SW-M | IG-M | OG-M | CS-M	ZC7Q010SS
200	50	SW-M | IG-M | OG-M | CS-M	ZC7Q020SS
242	50	SW-M | IG-M | OG-M | CS-M	ZC7Q0U0SS

Recommendation – colour combination of the components

No.	Description	Colour				
		SW-M	IG-M	OG-M	CS-M	INGL
A	Cutlery insert	SW-M/ OG-M	IG-M	OG-M	CS-M	CS-M
B1	Drawer frame – 242 mm	SW-M	IG-M	OG-M	CS-M	CS-M
B2	Adapter profile – connection to chipboard back	SW-M	IG-M	OG-M	CS-M	CS-M
C	Drawer frame – 100 mm	SW-M	IG-M	OG-M	CS-M	CS-M
D	Drawer frame – 200 mm	SW-M	IG-M	OG-M	CS-M	CS-M
Z1	Cross divider	SW-M	IG-M	OG-M	CS-M	CS-M

Colour	
SW-M	Silk white matt
IG-M	Indium grey matt
OG-M	Orion grey matt
CS-M	Carbon black matt
INGL	Stainless steel Anti-fingerprint

Reference pages

Overview	529
Wood design – frame	531
Recommendation for drawer | inner drawer	532
AMBIA-LINE kitchen accessories	538
More technical details	698

Assembly, removal and adjustment

Short URL
www.blum.com/a510

Wood design – frame

- Practical for kitchen applications and in other areas of the home
- Elegant, slim design
- Suitable for LEGRABOX drawers and inner pull-out, height M and K
- Suitable for MERIVOBOX drawers and inner pull-out, height M and K
- Can be put in any position and offers secure location
- Film | foil dispenser and knife holder can be used as an option
- Frame height 50 mm
- Material: wood décor/steel

Order information

A Cutlery insert

Nominal length NL (mm)	Width (mm)	Colour	Part no.
450	300	E01S | E02G | N01C	ZC7S450BH3
500	300	E01S | E02G | N01C	ZC7S500BH3
550	300	E01S | E02G | N01C	ZC7S550BH3
600	300	E01S | E02G | N01C	ZC7S600BH3
650	300	E01S | E02G | N01C	ZC7S650BH3

B Drawer frame – 242 mm

Nominal length NL (mm)	Width (mm)	Colour	Part no.
270–400	242	E01S | E02G | N01C	ZC7S300RHU

C Drawer frame – 100 mm

Nominal length NL (mm)	Width (mm)	Colour	Part no.
450	100	E01S | E02G | N01C	ZC7S450RH1
500	100	E01S | E02G | N01C	ZC7S500RH1
550	100	E01S | E02G | N01C	ZC7S550RH1
600	100	E01S | E02G | N01C	ZC7S600RH1
650	100	E01S | E02G | N01C	ZC7S650RH1

D Drawer frame – 200 mm

Nominal length NL (mm)	Width (mm)	Colour	Part no.
450	200	E01S | E02G | N01C	ZC7S450RH2
500	200	E01S | E02G | N01C	ZC7S500RH2
550	200	E01S | E02G | N01C	ZC7S550RH2
600	200	E01S | E02G | N01C	ZC7S600RH2
650	200	E01S | E02G | N01C	ZC7S650RH2

Accessories

Z1 Cross divider with spring clamp

Width (mm)	Height (mm)	Colour	Part no.
100	50	EC01 | EC02 | NU01	ZC7Q010SH
200	50	EC01 | EC02 | NU01	ZC7Q020SH
242	50	EC01 | EC02 | NU01	ZC7Q0U0SH

Recommendation – colour combination of the components

No.	Description	Colour			
		SW-M	OG-M	CS-M	INGL
A	Cutlery insert	E01S	E02G	N01C	N01C
B	Drawer frame – 242 mm	E01S	E02G	N01C	N01C
C	Drawer frame – 100 mm	E01S	E02G	N01C	N01C
D	Drawer frame – 200 mm	E01S	E02G	N01C	N01C
Z1	Cross divider	EC01	EC02	NU01	NU01

Colour		Colour	
SW-M	Silk white matt	E02G	Nebraska oak/OG-M
OG-M	Orion grey matt	EC02	Nebraska oak
CS-M	Carbon black matt	N01C	Tennessee walnut/CS-M
INGL	Stainless steel Anti-fingerprint	NU01	Tennessee walnut
E01S	Bardolino oak/SW-M		
EC01	Bardolino oak		

Reference pages

Overview	529	More technical details	698	Assembly, removal and adjustment	
Steel design – frame	530				
Recommendation for drawer | inner drawer	532			Short URL	
AMBIA-LINE kitchen accessories	538			www.blum.com/a510	

Recommendation for drawer | inner drawer

Cutlery insert and drawer frame

Cabinet width KB (mm)	Nominal length NL (mm) 450	500	550	600	650
400	1 x Cutlery insert				
450					
500					
550	1 x Cutlery insert 1 x Drawer frame – 100 mm				
600					
800	2 x Cutlery insert				
900	2 x Cutlery insert 1 x Drawer frame – 100 mm				
1000	2 x Cutlery insert 2 x Drawer frame – 100 mm				
1100	2 x Cutlery insert 1 x Drawer frame – 100 mm 1 x Drawer frame – 200 mm				
1200					

Drawer frame – nominal length NL 270–400 mm

Cabinet width KB (mm)	Nominal length NL (mm) 270	300	350	400
275	–	–		
300				
350		1 x Drawer frame – 242 mm		
400	1 x Drawer frame – 242 mm			
450				
500				
550				
600				
800	2 x Drawer frame – 242 mm	2 x Drawer frame – 242 mm		
900	3 x Drawer frame – 242 mm			
1000				
1200	4 x Drawer frame – 242 mm			

Drawer frame – nominal length NL 450–650 mm

Cabinet width KB (mm)	Nominal length NL (mm) 450	500	550	600	650
275	1 x Drawer frame – 100 mm				
300	1 x Drawer frame – 200 mm				
350					
400					
450	1 x Drawer frame – 100 mm 1 x Drawer frame – 200 mm				
500					
550					
600	2 x Drawer frame – 100 mm 1 x Drawer frame – 200 mm				
800	2 x Drawer frame – 100 mm 2 x Drawer frame – 200 mm				
900					
1000					
1100	2 x Drawer frame – 100 mm 3 x Drawer frame – 200 mm				
1200					

Reference pages

Overview	529
Steel design – frame	530
Wood design – frame	531
AMBIA-LINE kitchen accessories	538
More technical details	698

Assembly, removal and adjustment

Short URL
www.blum.com/a510

Steel design – frame

- Practical for kitchen applications and in other areas of the home
- Elegant, slim design
- Suitable for LEGRABOX high fronted pull-out and inner pull-out, height C and F
- Suitable for MERIVOBOX high fronted pull-out and inner pull-out, height E
- Can be put in any position and offers secure location
- Plate holder and spice holder can be used as an option
- Frame height 110 mm
- Material: steel, powder-coated

Order information

B1 Frame for high fronted pull-outs

	Nominal length NL (mm)	Width (mm)	Colour	Part no.
	270–650	242	SW-M | IG-M | OG-M | CS-M	ZC7F300RSU
	400–650	218	SW-M | IG-M | OG-M | CS-M	ZC7F400RSP

Incl. magnetic panel for connection to the drawer side or steel back

B2 Adapter profile – connection to chipboard back

	Height	Width (mm)	Colour	Part no.
	C | E	242	SW-M | IG-M | OG-M | CS-M	ZC7A0U0C
	F	242	SW-M | OG-M | CS-M	ZC7A0U0F
	C | E	218	SW-M | IG-M | OG-M | CS-M	ZC7A0P0C
	F	218	SW-M | OG-M | CS-M	ZC7A0P0F

Only available in height F for LEGRABOX

Recommendation

From nominal length NL 350 mm

Accessories

Z1 Cross divider

	Width (mm)	Height (mm)	Colour	Part no.
	242	110	SW-M | IG-M | OG-M | CS-M	ZC7Q0U0FS
	218	110	SW-M | IG-M | OG-M | CS-M	ZC7Q0P0FS

Recommendation – colour combination of the components

No.	Description	Colour				
		SW-M	IG-M	OG-M	CS-M	INGL
B1	Frame for high fronted pull-outs	SW-M	IG-M	OG-M	CS-M	CS-M
B2	Adapter profile – connection to chipboard back	SW-M	IG-M	OG-M	CS-M	CS-M
Z1	Cross divider	SW-M	IG-M	OG-M	CS-M	CS-M

Colour		Colour	
SW-M	Silk white matt	CS-M	Carbon black matt
IG-M	Indium grey matt	INGL	Stainless steel Anti-fingerprint
OG-M	Orion grey matt		

Reference pages

Overview	529
Steel design – bottles	534
Steel design – cross gallery	535
Wood design – frame	536
Recommendation for high fronted pull-out | inner pull-out	537
AMBIA-LINE kitchen accessories	538
More technical details	698
Assembly, removal and adjustment	

Short URL
www.blum.com/a510

Steel design – bottles

- Practical for kitchen applications
- Elegant, slim design
- Suitable for LEGRABOX high fronted pull-out, heights C and F
- Suitable for MERIVOBOX high fronted pull-out, heights E
- Can be put in any position and offers secure location
- Installation height 140 mm (drawer frame with bottle set)
- Material: steel, powder-coated

Order information

C Drawer frame – 100 mm

	Nominal length NL (mm)	Width (mm)	Colour	Part no.
	450	100	SW-M | IG-M | OG-M | CS-M	ZC7S450RS1
	500	100	SW-M | IG-M | OG-M | CS-M	ZC7S500RS1
	550	100	SW-M | IG-M | OG-M | CS-M	ZC7S550RS1
	600	100	SW-M | IG-M | OG-M | CS-M	ZC7S600RS1
	650	100	SW-M | OG-M | CS-M	ZC7S650RS1

D Drawer frame – 200 mm

	Nominal length NL (mm)	Width (mm)	Colour	Part no.
	450	200	SW-M | IG-M | OG-M | CS-M	ZC7S450RS2
	500	200	SW-M | IG-M | OG-M | CS-M	ZC7S500RS2
	550	200	SW-M | IG-M | OG-M | CS-M	ZC7S550RS2
	600	200	SW-M | IG-M | OG-M | CS-M	ZC7S600RS2
	650	200	SW-M | OG-M | CS-M	ZC7S650RS2

E Bottle set

	Nominal length NL (mm)	Width (mm)	Colour	Part no.
	450–650	100	SW-M | IG-M | OG-M | CS-M [1]	ZC7B0100S
	450–650	200	SW-M | IG-M | OG-M | CS-M [1]	ZC7B0200S

Consisting of:
- 2 x Adapter
- 3 x Cross divider

Not suitable for inner pull-out!
Order drawer frame separately
[1] Nominal length NL 650 mm not available in IG-M

Recommendation – colour combination of the components

No.	Description	Colour				
		SW-M	IG-M	OG-M	CS-M	INGL
C	Drawer frame – 100 mm	SW-M	IG-M	OG-M	CS-M	CS-M
D	Drawer frame – 200 mm	SW-M	IG-M	OG-M	CS-M	CS-M
E	Bottle set	SW-M	IG-M	OG-M	CS-M	CS-M

Colour		Colour	
SW-M	Silk white matt	CS-M	Carbon black matt
IG-M	Indium grey matt	INGL	Stainless steel Anti-fingerprint
OG-M	Orion grey matt		

Reference pages

Overview	529	AMBIA-LINE kitchen accessories	538	Assembly, removal and adjustment	
Steel design – frame	533	More technical details	698		
Steel design – cross gallery	535				
Wood design – frame	536			Short URL	
Recommendation for high fronted pull-out | inner pull-out	537			www.blum.com/a510	

Steel design – cross gallery

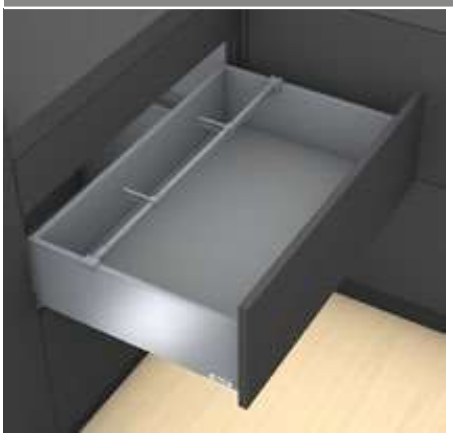

- Practical for kitchen applications
- With cross gallery for cutting to size
- Suitable for LEGRABOX high fronted pull-out and inner pull-out, height C and F
- Suitable for MERIVOBOX high fronted pull-out and inner pull-out, height E
- Can be put in any position and offers secure location

Order information

LEGRABOX

A1 Cross gallery for cutting to size

Length (mm)	Colour	Material	Part no.
1080	SW-M | OG-M | CS-M	Aluminium	ZR7.1080U

Cutting: Internal cabinet width LW – 90 mm

A3 Cross gallery connector

Drawer side	Colour	Part no.
LEGRABOX pure	SW-M | OG-M | CS-M	ZC7U10E0
LEGRABOX free	SW-M | OG-M | CS-M	ZC7U11E0

Order 2 x for each cross gallery

B Lateral divider

Length (mm)	Colour	Part no.
84	SW-M | OG-M | CS-M	ZC7U10F0

MERIVOBOX

A1 Cross gallery for cutting to size

Length (mm)	Colour	Material	Part no.
1059	SW-M | IG-M | OG-M	Aluminium	ZR4.1059U

Cutting: Internal cabinet width LW – 111 mm

A3 Cross gallery connector

Side panel	Colour	Part no.
Gallery | BOXCAP	SW-M | IG-M | OG-M	ZC4U10E0
BOXCOVER	SW-M | IG-M | OG-M	ZC4U11E0

Order 2 x for each cross gallery

B Lateral divider

Length (mm)	Colour	Part no.
84	SW-M | IG-M | OG-M	ZC4U10F0

Recommendation – colour combination of the components

No.	Description	Colour				
		SW-M	IG-M	OG-M	CS-M	INGL
A1	Cross gallery for cutting to size	SW-M	IG-M	OG-M	CS-M	CS-M
A3	Cross gallery connector	SW-M	IG-M	OG-M	CS-M	CS-M
B	Lateral divider	SW-M	IG-M	OG-M	CS-M	CS-M

Colour		Colour	
SW-M	Silk white matt	CS-M	Carbon black matt
IG-M	Indium grey matt	INGL	Stainless steel Anti-fingerprint
OG-M	Orion grey matt		

Reference pages

Overview	529	Wood design – frame	536	Assembly, removal and adjustment	
AMBIA-LINE kitchen accessories	538	More technical details	698		
Recommendation for high fronted pull-out | inner pull-out	537				
Steel design – frame	533			Short URL	
Steel design – bottles	534			www.blum.com/a510	

Wood design – frame

- Practical for kitchen applications and in other areas of the home
- Elegant, slim design
- Suitable for LEGRABOX high fronted pull-out and inner pull-out, height C and F
- Suitable for MERIVOBOX high fronted pull-out and inner pull-out, height E
- Can be put in any position and offers secure location
- Plate holder and spice holder can be used as an option
- Frame height 110 mm
- Material: wood décor/steel

Order information

B	Frame for high fronted pull-outs			
	Nominal length NL (mm)	Width (mm)	Colour	Part no.
	270–650	242	E01S | E02G | N01C	ZC7F300RHU
	400–650	218	E01S | E02G | N01C	ZC7F400RHP

Accessories

Z1	Cross divider with spring clamp			
	Width (mm)	Height (mm)	Colour	Part no.
	242	100	EC01 | EC02 | NU01	ZC7Q0U0FH
	218	100	EC01 | EC02 | NU01	ZC7Q0P0FH

Recommendation – colour combination of the components

No.	Description	Colour			
		SW-M	OG-M	CS-M	INGL
B	Frame for high fronted pull-outs	E01S	E02G	N01C	N01C
Z1	Cross divider	EC01	EC02	NU01	NU01

Colour		Colour	
SW-M	Silk white matt	E02G	Nebraska oak/OG-M
OG-M	Orion grey matt	EC02	Nebraska oak
CS-M	Carbon black matt	N01C	Tennessee walnut/CS-M
INGL	Stainless steel Anti-fingerprint	NU01	Tennessee walnut
E01S	Bardolino oak/SW-M		
EC01	Bardolino oak		

Reference pages

Overview	529	AMBIA-LINE kitchen accessories	538	Assembly, removal and adjustment	
Steel design – frame	533	More technical details	698		
Steel design – bottles	534				
Steel design – cross gallery	535			Short URL	
Recommendation for high fronted pull-out | inner pull-out	537			www.blum.com/a510	

Recommendation for high fronted pull-out | inner pull-out

Frame for high fronted pull-outs – nominal length NL 270–400 mm

Cabinet width KB (mm)	Nominal length NL (mm) 270	300	350	400
275	–			
300				
350				
400	1 x Frame for high fronted pull-outs – 242 mm			
450				
500				
550				
600				
800	2 x Frame for high fronted pull-outs – 242 mm			
900				
1000	3 x Frame for high fronted pull-outs – 242 mm			
1200				

Frame for high fronted pull-outs – nominal length NL 450–650 mm

Cabinet width KB (mm)	Nominal length NL (mm) 450	500	550	600	650
275	–				
300	1 x Frame for high fronted pull-outs – 218 mm				
350					
400					
450					
500					
550					
600					
800	2 x Frame for high fronted pull-outs – 218 mm				
900					
1000					
1200	3 x Frame for high fronted pull-outs – 218 mm				

Inner dividing systems

Reference pages

Overview	529
Steel design – frame	533
Steel design – bottles	534
Steel design – cross gallery	535
Wood design – frame	536
AMBIA-LINE kitchen accessories	538
More technical details	698

Assembly, removal and adjustment

Short URL
www.blum.com/a510

Small accessories, big impact

The attractive AMBIA-LINE kitchen accessories combine a high-quality design with well-conceived functionality. Holders for knives, plates and spices and dispensers for cling film or foil help to keep the kitchen tidy. Everything is perfectly in place – your kitchen utensils are tidily stored in the pull-out and easy to access.

Foil/film dispenser
By using the foil dispenser, cling film and aluminium foil can be pulled out without creases and cleanly cut.

Knife holder
Up to nine knives can be stored safely and tidily in the knife holder to ensure easy access.

Blum plate holder
The infinitely adjustable Blum plate holder can safely accommodate up to 12 plates in the pull-out and can also be easily transported.

Spice holder
Spice containers of various sizes can be tidily stored in the spice holder without risk of tipping over.

Film | foil dispenser for cling film and aluminium foil

- Dispenser rod for crease-free removal of cling film
- Antislipping device through flexible base fixing bracket
- Removable
- Suitable for LEGRABOX drawers and inner pull-out, height M and K
- Suitable for MERIVOBOX drawers and inner pull-out, height M and K
- In combination with AMBIA-LINE drawer frame with a width of 200 mm

Order information

Version	Colour	Material	Part no.
●	Orion grey matt	Nylon/stainless steel	ZC7C0000
–			ZC7C0001

Version

●	With cling film and aluminium foil
–	Without cling film and aluminium foil

Dimensions

Length (mm)	409
Width (mm)	187

Reference pages

Assembly, removal and adjustment

Short URL

www.blum.com/a520

Knife holder

- Safe accommodation of four large and five small knives
- Incl. handle support for long knives
- Antislipping device through base fixing bracket
- Suitable for LEGRABOX drawers and inner pull-out, height M and K
- Suitable for MERIVOBOX drawers and inner pull-out, height M and K
- In combination with AMBIA-LINE drawer frame with a width of 200 mm

Order information

Colour	Material	Part no.
Orion grey matt	Nylon/stainless steel	ZC7M0200

Dimensions

Length (mm)	409
Width (mm)	187

Reference pages

Assembly, removal and adjustment

Short URL

www.blum.com/a520

Blum plate holder

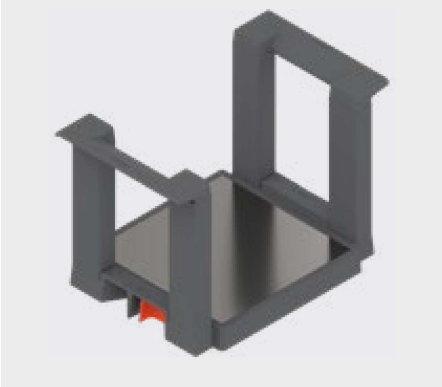

- Safe accommodation of up to 12 plates
- Can be infinitely adjusted to suit plate size
- Removable
- Suitable for LEGRABOX high fronted pull-out and inner pull-out, height C and F
- Suitable for MERIVOBOX high fronted pull-out and inner pull-out, height E

Order information

Colour	Material	Part no.
Orion grey matt	Nylon/stainless steel	ZC7T0350

Dimensions

Diameter of plates (mm)	186–322
Stacking height of plates (mm)	146
Overall height (mm)	170

Reference pages

Assembly, removal and adjustment

Short URL

www.blum.com/a520

Spice holder

- Organised storage of spice packets of various sizes
- Suitable for LEGRABOX high fronted pull-out and inner pull-out, height C and F
- Suitable for MERIVOBOX high fronted pull-out and inner pull-out, height E
- In combination with AMBIA-LINE frame for high fronted pull-outs with a width of 218 mm

Order information

Colour	Material	Part no.
Orion grey matt	Nylon/stainless steel	ZC7G0P0I

Dimensions

Length (mm)	356
Width (mm)	205

Reference pages

Assembly, removal and adjustment

Short URL

www.blum.com/a520

Everything you need at a glance

ORGA-LINE for TANDEMBOX is a high-quality inner dividing system with a customised design for drawers and pull-outs.
Be it cutlery, bottles or pots – all your items can be stored in a way that is both practical and convenient. All the dividers can be adjusted to accommodate the storage items. ORGA-LINE therefore provides easy access and organisation in drawers and pull-outs.
The practical ORGA-LINE kitchen accessories also make many kitchen tasks easier and organise interiors.

Drawer

Container sets

Utensil divider sets

Combo sets

The ORGA-LINE sets for drawers can be supplemented with a foil/film dispenser and a knife holder.

High fronted pull-out

TANDEMBOX antaro

TANDEMBOX plus

The ORGA-LINE sets for high fronted pull-outs can be supplemented with a spice holder and/or a plate-holder.

Drawer

Symbolic image

Container sets	542
Utensil divider sets	544
Combo sets	546
Individual sets	548

High fronted pull-out

ORGA-LINE for TANDEMBOX antaro – cross divider	550
ORGA-LINE for TANDEMBOX antaro – cross gallery	551
ORGA-LINE for TANDEMBOX plus – cross divider	☎
ORGA-LINE for TANDEMBOX plus – cross gallery	☎
Recommendation for high fronted pull-out | inner pull-out	552

Assembly, removal and adjustment

Symbolic image

Assembly, removal and adjustment

Short URL
www.blum.com/a530

Inner dividing systems

Pictograph

☎	Item available on request
65°C	Dishwasher-proof up to 65°C

Container sets

- Practical for kitchen applications
- Well-suited for cutlery
- Suitable for TANDEMBOX antaro drawers and inner pull-out, height M and K
- Removable containers (dishwasher-proof)
- Film | foil dispenser and knife holder can be used as an option
- Nominal length NL 450–550 mm
- Recommendation: cabinet width KB 275–1200 mm

Space requirement

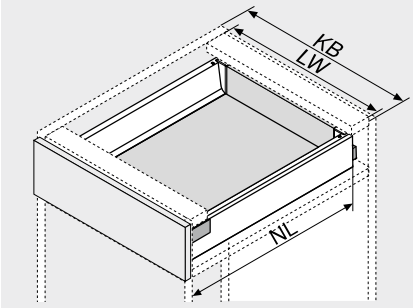

NL	Nominal length
KB	Cabinet width
LW	Internal cabinet width

Order information

KB (mm) 275–299

Symbol image, NL 500 mm

NL (mm)	Part no.
450	ZSI.450BI1N
500	ZSI.500BI1N
550	ZSI.550BI1N

KB (mm) 300–399

Symbol image, NL 500 mm

NL (mm)	Part no.
450	ZSI.450BI2N
500	ZSI.500BI2N
550	ZSI.550BI2N

KB (mm) 400–549

Symbol image, NL 500 mm

NL (mm)	Part no.
450	ZSI.450BI3N
500	ZSI.500BI3
550	ZSI.550BI3

KB (mm) 550–599

Symbol image, NL 500 mm

NL (mm)	Part no.		Part no.
450	ZSI.450BI1N	+	ZSI.450BI3N
500	ZSI.500BI1N	+	ZSI.500BI3
550	ZSI.550BI1N	+	ZSI.550BI3

KB (mm) 600

Symbol image, NL 500 mm

NL (mm)		Part no.
450	[1]	ZSI.60VEI4
500	[1]	ZSI.60VEI6
550	[1]	ZSI.60VEI7

[1] Full width set

KB (mm) 601–699

Symbol image, NL 500 mm

NL (mm)	Part no.		Part no.
450	ZSI.450BI1N	+	ZSI.450BI3N
500	ZSI.500BI1N	+	ZSI.500BI3
550	ZSI.550BI1N	+	ZSI.550BI3

KB (mm) 700–799

Symbol image, NL 500 mm

NL (mm)	Part no.		Part no.
450	ZSI.450BI2N	+	ZSI.450BI3N
500	ZSI.500BI2N	+	ZSI.500BI3
550	ZSI.550BI2N	+	ZSI.550BI3

KB (mm) 800–899

Symbol image, NL 500 mm

NL (mm)		Part no.
450	2 x	ZSI.450BI3N
500	2 x	ZSI.500BI3
550	2 x	ZSI.550BI3

KB (mm) 900

Symbol image, NL 500 mm

NL (mm)		Part no.
450	[1]	ZSI.90VEI4
500	[1]	ZSI.90VEI6
550	[1]	ZSI.90VEI7

[1] Full width set

KB (mm) 901–999

Symbol image, NL 500 mm

NL (mm)	Part no.		Part no.
450	ZSI.450BI3N	+	ZSI.450KI4N
500	ZSI.500BI3	+	ZSI.500KI4
550	ZSI.550BI3	+	ZSI.550KI4

KB (mm) 1000–1099

Symbol image, NL 500 mm

NL (mm)		Part no.
450	2 x	ZSI.450KI4N
500	2 x	ZSI.500KI4
550	2 x	ZSI.550KI4

KB (mm) 1100–1199

Symbol image, NL 500 mm

NL (mm)		Part no.		Part no.
450	2 x	ZSI.450BI3N	+	ZSI.450FI2N
500	2 x	ZSI.500BI3	+	ZSI.500FI2N
550	2 x	ZSI.550BI3	+	ZSI.550FI2N

KB (mm) 1200

Symbol image, NL 500 mm

NL (mm)		Part no.
450	[1]	ZSI.12VEI4
500	[1]	ZSI.12VEI6
550	[1]	ZSI.12VEI7

[1] Full width set

SPACE CORNER

Symbol image, NL 650 mm

NL (mm)	Part no.
600	ZSI.450BI3E
650	ZSI.500BI3E

ORGA-LINE kitchen accessories

Placement in the sets

1	1 x ZSZ.01Fx
1	1 x ZSZ.02Fx
2	1 x ZSZ.01Fx + 1 x ZSZ.02Fx
2	1 x ZSZ.02M0

ZSZ.01Fx

ZSZ.02Fx

ZSZ.02M0

x	0 = with cling film and aluminium foil 1 = without cling film and aluminium foil

Container sets

Reference pages					
Overview	541	More technical details	698	Assembly, removal and adjustment	
Utensil divider sets	544				
Combo sets	546				
Individual sets	548			Short URL	
ORGA-LINE kitchen accessories	554			www.blum.com/a530	
Accessories	549				
Planning	549				

Utensil divider sets

- Practical for kitchen applications and in other areas of the home
- Suitable for TANDEMBOX antaro drawers and inner pull-out, height M and K
- Removable containers (dishwasher-proof)
- Film | foil dispenser and knife holder can be used as an option
- Nominal length NL 450–550 mm
- Recommendation: cabinet width KB 275–1200 mm

Space requirement

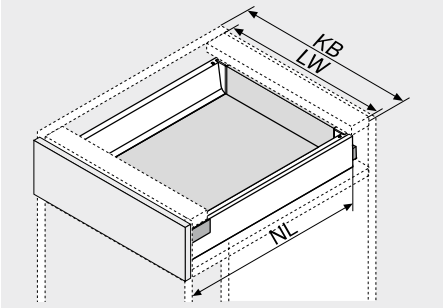

NL	Nominal length
KB	Cabinet width
LW	Internal cabinet width

Order information

KB (mm)	275–349
Symbol image, NL 500 mm	
NL (mm)	**Part no.**
450	ZSI.450BI1N
500	ZSI.500BI1N
550	ZSI.550BI1N

KB (mm)	350–449
Symbol image, NL 500 mm	
NL (mm)	**Part no.**
450	ZSI.450KI2N
500	ZSI.500KI2N
550	ZSI.550KI2N

KB (mm)	450–599
Symbol image, NL 500 mm	
NL (mm)	**Part no.**
450	ZSI.450FI2N
500	ZSI.500FI2N
550	ZSI.550FI2N

KB (mm)	600
Symbol image, NL 500 mm	
NL (mm)	**Part no.**
450 [1]	ZSI.60VUI4
500 [1]	ZSI.60VUI6
550 [1]	ZSI.60VUI7

[1] Full width set

KB (mm)	601–699	
Symbol image, NL 500 mm		
NL (mm)	**Part no.**	
450	ZSI.450BI1N	+ ZSI.450KI3N
500	ZSI.500BI1N	+ ZSI.500KI3N
550	ZSI.550BI1N	+ ZSI.550KI3N

KB (mm)	700–799	
Symbol image, NL 500 mm		
NL (mm)	**Part no.**	
450	ZSI.450KI2N	+ ZSI.450KI3N
500	ZSI.500KI2N	+ ZSI.500KI3N
550	ZSI.550KI2N	+ ZSI.550KI3N

KB (mm)	800–899	
Symbol image, NL 500 mm		
NL (mm)	**Part no.**	
450	2 x	ZSI.450KI3N
500	2 x	ZSI.500KI3N
550	2 x	ZSI.550KI3N

KB (mm)	900	
Symbol image, NL 500 mm		
NL (mm)	**Part no.**	
450 [1]		ZSI.90VUI4
500 [1]		ZSI.90VUI6
550 [1]		ZSI.90VUI7

[1] Full width set

KB (mm)	901–999	
Symbol image, NL 500 mm		
NL (mm)	**Part no.**	
450	2 x	ZSI.450KI3N
500	2 x	ZSI.500KI3N
550	2 x	ZSI.550KI3N

KB (mm)	1000–1099		
Symbol image, NL 500 mm			
NL (mm)	**Part no.**		**Part no.**
450	2 x	ZSI.450KI2N	+ ZSI.450FI3
500	2 x	ZSI.500KI2N	+ ZSI.500FI3
550	2 x	ZSI.550KI2N	+ ZSI.550FI3

KB (mm)	1100–1199		
Symbol image, NL 500 mm			
NL (mm)	**Part no.**		**Part no.**
450	2 x	ZSI.450KI3N	+ ZSI.450FI2N
500	2 x	ZSI.500KI3N	+ ZSI.500FI2N
550	2 x	ZSI.550KI3N	+ ZSI.550FI2N

KB (mm)	1200
Symbol image, NL 500 mm	
NL (mm)	**Part no.**
450 [1]	ZSI.12VUI4
500 [1]	ZSI.12VUI6
550 [1]	ZSI.12VUI7

[1] Full width set

SPACE CORNER

Symbol image, NL 650 mm

NL (mm)	Part no.
600	ZSI.450FI3
650	ZSI.500FI3

ORGA-LINE kitchen accessories

Placement in the sets	
1	1 x ZSZ.01Fx
1	1 x ZSZ.02Fx
2	1 x ZSZ.01Fx + 1 x ZSZ.02Fx
2	1 x ZSZ.02M0

ZSZ.01Fx

ZSZ.02Fx

ZSZ.02M0

x	0 = with cling film and aluminium foil 1 = without cling film and aluminium foil

Utensil divider sets

Reference pages					
Overview	541	More technical details	698	Assembly, removal and adjustment	
Container sets	542				
Combo sets	546				
Individual sets	548			Short URL	
ORGA-LINE kitchen accessories	554			www.blum.com/a530	
Accessories	549				
Planning	549				

Combo sets

- Practical for kitchen applications and in other areas of the home
- Suitable for TANDEMBOX antaro drawers and inner pull-out, height M and K
- Removable containers (dishwasher-proof)
- Film | foil dispenser and knife holder can be used as an option
- Nominal length NL 450–550 mm
- Recommendation: cabinet width KB 275–1200 mm

Space requirement

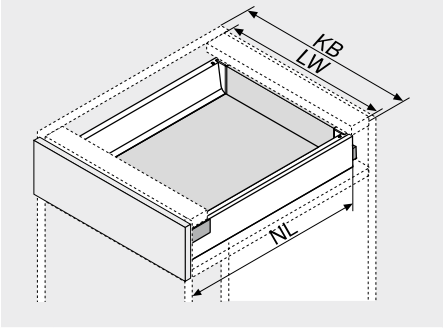

NL	Nominal length
KB	Cabinet width
LW	Internal cabinet width

Order information

KB (mm)	275–349
Symbol image, NL 500 mm	
NL (mm)	**Part no.**
450	ZSI.450BI1N
500	ZSI.500BI1N
550	ZSI.550BI1N

KB (mm)	350–449
Symbol image, NL 500 mm	
NL (mm)	**Part no.**
450	ZSI.450KI2N
500	ZSI.500KI2N
550	ZSI.550KI2N

KB (mm)	450–600
Symbol image, NL 500 mm	
NL (mm)	**Part no.**
450	ZSI.450MI3
500	ZSI.500MI3
550	ZSI.550MI3

KB (mm)	601–649	
Symbol image, NL 500 mm		
NL (mm)	**Part no.**	**Part no.**
450	ZSI.450BI1N +	ZSI.450MI3
500	ZSI.500BI1N +	ZSI.500MI3
550	ZSI.550BI1N +	ZSI.550MI3

KB (mm)	650–750	
Symbol image, NL 500 mm		
NL (mm)	**Part no.**	**Part no.**
450	ZSI.450KI2N +	ZSI.450MI3
500	ZSI.500KI2N +	ZSI.500MI3
550	ZSI.550KI2N +	ZSI.550MI3

KB (mm)	751–899	
Symbol image, NL 500 mm		
NL (mm)	**Part no.**	**Part no.**
450	ZSI.450KI3N +	ZSI.450BI3N
500	ZSI.500KI3N +	ZSI.500BI3
550	ZSI.550KI3N +	ZSI.550BI3

KB (mm)	900–1200	
Symbol image, NL 500 mm		
NL (mm)	**Part no.**	**Part no.**
450	ZSI.450KI3N +	ZSI.450KI4N
500	ZSI.500KI3N +	ZSI.500KI4
550	ZSI.550KI3N +	ZSI.550KI4

SPACE CORNER

Symbol image, NL 650 mm

NL (mm)	Part no.
600	ZSI.450FI3
650	ZSI.500FI3

ORGA-LINE kitchen accessories

Placement in the sets	
1	1 x ZSZ.01Fx
1	1 x ZSZ.02Fx
2	1 x ZSZ.01Fx + 1 x ZSZ.02Fx
2	1 x ZSZ.02M0

ZSZ.01Fx

ZSZ.02Fx

ZSZ.02M0

x	0 = with cling film and aluminium foil 1 = without cling film and aluminium foil

Combo sets

Reference pages					
Overview	541	More technical details	698	Assembly, removal and adjustment	
Container sets	542				
Utensil divider sets	544				
Individual sets	548			Short URL	
ORGA-LINE kitchen accessories	554			www.blum.com/a530	
Accessories	549				
Planning	549				

Individual sets

- Adjustable partial width sets
- Practical for kitchen applications and in other areas of the home
- Suitable for TANDEMBOX antaro drawers and inner pull-out, height M and K
- Removable containers (dishwasher-proof)
- Film | foil dispenser and knife holder can be used as an option
- Nominal length NL 450–550 mm
- Recommendation: cabinet width KB 275–1200 mm

Space requirement

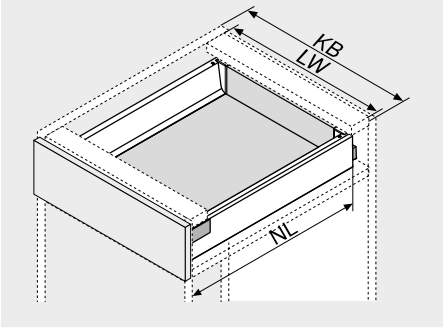

NL	Nominal length
KB	Cabinet width
LW	Internal cabinet width

Order information

BI1 set

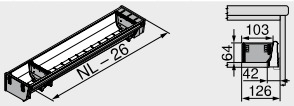

Symbol image, NL 500 mm

NL (mm)	Part no.
450	ZSI.450BI1N
500	ZSI.500BI1N
550	ZSI.550BI1N

BI2 set

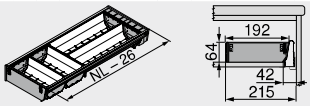

Symbol image, NL 500 mm

NL (mm)	Part no.
450	ZSI.450BI2N
500	ZSI.500BI2N
550	ZSI.550BI2N

BI3 set

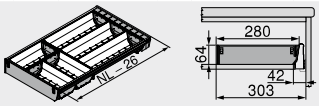

Symbol image, NL 500 mm

NL (mm)	Part no.
450	ZSI.450BI3N
500	ZSI.500BI3
550	ZSI.550BI3

KI2 set

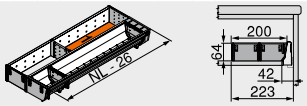

Symbol image, NL 500 mm

NL (mm)	Part no.
450	ZSI.450KI2N
500	ZSI.500KI2N
550	ZSI.550KI2N

KI3 set

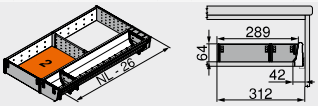

Symbol image, NL 500 mm

NL (mm)	Part no.
450	ZSI.450KI3N
500	ZSI.500KI3N
550	ZSI.550KI3N

KI4 set

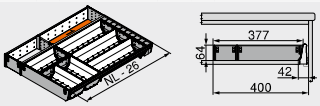

Symbol image, NL 500 mm

NL (mm)	Part no.
450	ZSI.450KI4N
500	ZSI.500KI4
550	ZSI.550KI4

MI3 set

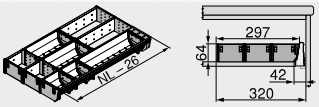

Symbol image, NL 500 mm

NL (mm)	Part no.
450	ZSI.450MI3
500	ZSI.500MI3
550	ZSI.550MI3

FI1 set

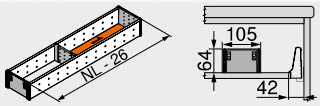

Symbol image, NL 500 mm

NL (mm)	Part no.
450	ZSI.450FI1
500	ZSI.500FI1
550	ZSI.550FI1

FI2 set

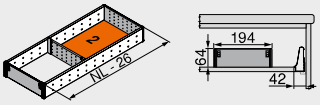

Symbol image, NL 500 mm

NL (mm)	Part no.
450	ZSI.450FI2N
500	ZSI.500FI2N
550	ZSI.550FI2N

FI3 set

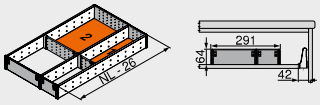

Symbol image, NL 500 mm

NL (mm)	Part no.
450	ZSI.450FI3
500	ZSI.500FI3
550	ZSI.550FI3

BI3E set
SPACE CORNER

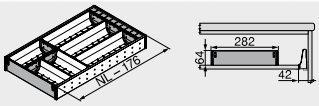

Symbol image, NL 650 mm

NL (mm)	Part no.
600	ZSI.450BI3E
650	ZSI.500BI3E

Individual sets

Order information

Accessories

Containers

Length (mm)	Width (mm)	Part no.
88	88	ZSI.010SI
176		ZSI.020SI
264		ZSI.030SI
352		ZSI.040SI

Adjustable cross dividers

Width (mm)	Part no.
88	ZSI.010Q
176	ZSI.020Q

ORGA-LINE kitchen accessories

Film dispenser

Version	Part no.
With cling film	ZSZ.01F0
Without cling film	ZSZ.01F1

Placement in the sets

1	1 x ZSZ.01Fx
2	1 x ZSZ.01Fx + 1 x ZSZ.02Fx

Foil dispenser

Version	Part no.
With aluminium foil	ZSZ.02F0
Without aluminium foil	ZSZ.02F1

Placement in the sets

1	1 x ZSZ.02Fx
2	1 x ZSZ.01Fx + 1 x ZSZ.02Fx

Knife holder

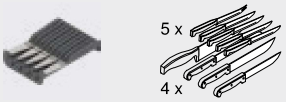

Colour	Part no.
RAL 7037 dust grey	ZSZ.02M0
Incl. handle support	

Placement in the sets

2	1 x ZSZ.02M0

Planning

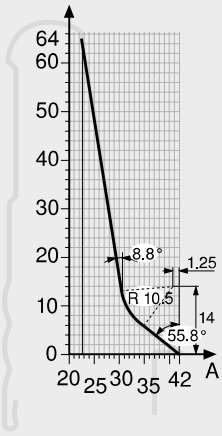

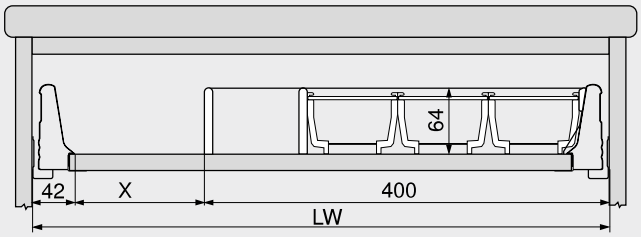

For additional inserts:
E.g. wooden knife holder

Example:
Cabinet width KB 600 mm
Cutlery & utensil combination ZSI.500KI4

X = internal cabinet width LW – 400 mm – 42 mm

Reference pages

Overview	541
Container sets	542
Utensil divider sets	544
Combo sets	546
ORGA-LINE kitchen accessories	554
More technical details	698

Assembly, removal and adjustment

Short URL
www.blum.com/a530

ORGA-LINE for TANDEMBOX antaro – cross divider

- ORGA-LINE flexible dividing system
- With cross divider to be cut to size
- Suitable for TANDEMBOX antaro high fronted pull-out, heights C and D
- Nominal length NL 270–650 mm
- Recommendation: cabinet width KB 275–1200 mm

Space requirement

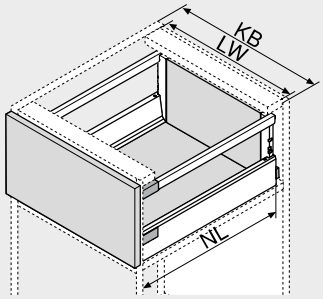

NL	Nominal length
KB	Cabinet width
LW	Internal cabinet width

Order information

A1 Cross divider for cutting to size

Cabinet width KB (mm)	Colour	Material	Part no.
275	SW | R9006	Aluminium	Z40L152A
300			Z40L177A
550			Z40L427A
600			Z40L477A
900			Z40L777A
1200			Z40L1077A

Cutting

X	Internal cabinet width LW – 91 mm
Y	Internal cabinet width LW – 295 mm (KB 275 mm)
Y	Internal cabinet width LW – 320 mm (KB 300 mm)
Z	152 mm (KB 275 mm)
Z	177 mm (KB 300 mm)

A2 Cross divider connector – dividing wall

Colour	Material	Part no.
SW | WGR	Nylon	Z40L0002

Order 1 x for each cross divider; Y | Z

A3 Cross divider connector – gallery

Height	Colour	Part no.
C	SW | WGR	Z40C0002Z
D		Z40D0002Z

Order 2 x for each cross divider; X
Order 1 x for each cross divider; Y | Z

B Lateral divider

Colour	Material	Part no.
SW | R9006	Steel	Z43L100S

D Bottle rack

Material: Stainless steel

Nominal length NL (mm)	Cabinet width KB (mm) 275	300
450		Z48.30B0I4
500	☎ Z48.27B0I6	Z48.30B0I6
550	☎ Z48.27B0I7	Z48.30B0I7
600		☎ Z48.30B0I8
650		☎ Z48.30B0I9

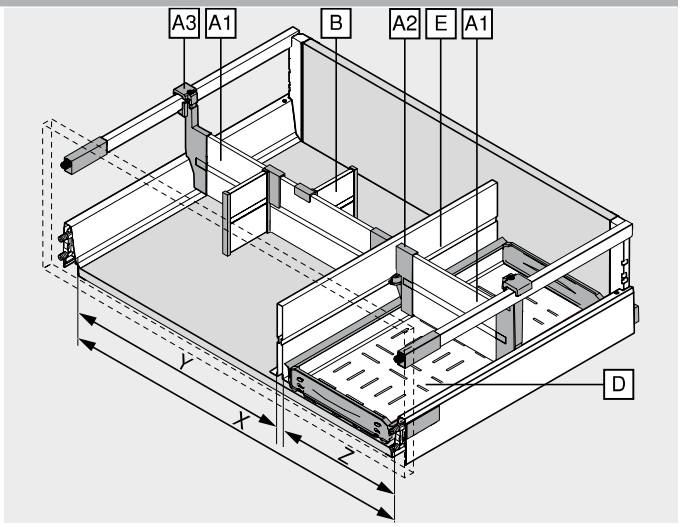

E Dividing wall

Material: Steel

Nominal length NL (mm)	Colour SW | R9006
450	Z46L420S
500	Z46L470S
550	Z46L520S
600	Z46L570S
650	Z46L620S

Not suitable for inner pull-out!

Recommendation – colour combination of the components

No.	Description	Colour SW	R9006
A1	Cross divider for cutting to size	SW	R9006
A2	Cross divider connector – dividing wall	SW	WGR
A3	Cross divider connector – gallery	SW	WGR
B	Lateral divider	SW	R9006
D	Bottle rack	INGL	INGL
E	Dividing wall	SW	R9006

Colour		Colour	
SW	Silk white	WGR	White grey
R9006	RAL 9006 grey (white aluminium)		

Reference pages

Overview	541
Recommendation for high fronted pull-out | inner pull-out	552
Recommendation – colour combination of the components	551
ORGA-LINE kitchen accessories	554

Assembly, removal and adjustment

Short URL
www.blum.com/a530

ORGA-LINE for TANDEMBOX antaro – cross gallery

- ORGA-LINE flexible dividing system
- With cross gallery for cutting to size
- Suitable for TANDEMBOX antaro high fronted pull-out, heights C and D
- Nominal length NL 270–650 mm
- Recommendation: cabinet width KB 275–1200 mm

Space requirement

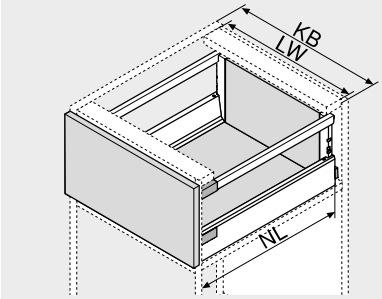

NL	Nominal length
KB	Cabinet width
LW	Internal cabinet width

Order information

A1 Cross gallery for cutting to size

Cabinet width KB (mm)	Colour	Material	Part no.
275	SW | R9006	Aluminium	ZRG.179Q
300			ZRG.204Q
550			ZRG.454Q
600			ZRG.504Q
900			ZRG.804Q
1200			ZRG.1104Q

Cutting
Internal cabinet width LW – 63 mm

A3 Cross gallery connector

Colour	Material	Part no.
SW | WGR	Nylon	ZRU.01E0

Order 2 x for each cross gallery

B Lateral divider

Colour	Material	Part no.
SW | WGR	Nylon	ZRU.11F0

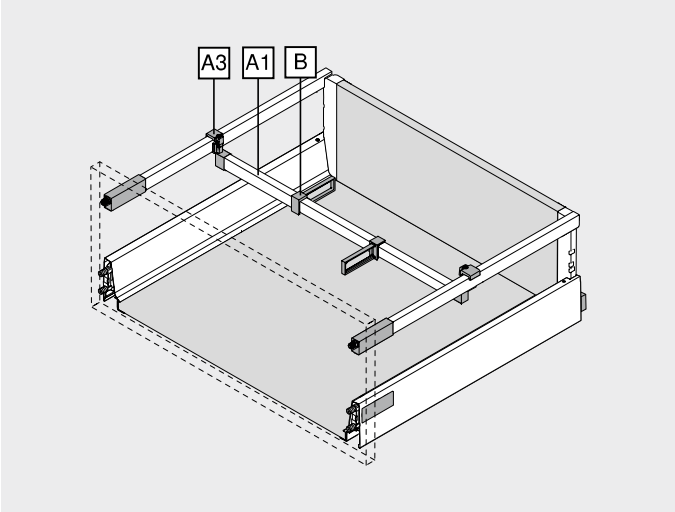

Recommendation – colour combination of the components

No.	Description	Colour			
		SW	R9006		
A1	Cross gallery for cutting to size	SW	R9006		
A3	Cross gallery connector	SW	WGR		
B	Lateral divider	SW	WGR		

Colour		Colour	
SW	Silk white	WGR	White grey
R9006	RAL 9006 grey (white aluminium)		

Reference pages

Overview	541
Recommendation for high fronted pull-out | inner pull-out	552
ORGA-LINE kitchen accessories	554

Assembly, removal and adjustment

Short URL
www.blum.com/a530

Recommendation for high fronted pull-out | inner pull-out

Application – provisions

Application – open packs of food

Cabinet width KB (mm)	Nominal length NL (mm) 450	500	550	–	–
275	1 x cross divider	2 x cross divider			
300					
400					
450	1 x cross divider, 2 x lateral dividers	2 x cross divider, 3 x lateral dividers			
500					
550					
600					
800	1 x cross divider, 3 x lateral dividers	2 x cross divider, 6 x lateral dividers			
900					
1000					
1200					

Application	Nominal length NL (mm) 600	650
SPACE CORNER	1 x cross divider, 2 x lateral dividers	

Application – crockery

Cabinet width KB (mm)	Nominal length NL (mm) 450	500	550	–	–
Starting at 400	2 x Blum plate holders				
Starting at 800	4 x Blum plate holders				
Starting at 1000	6 x Blum plate holders				

SPACE CORNER

Installation dimension PM (mm)	Nominal length NL (mm) 600	650
Up to 1050	2 x Blum plate holders	
Starting at 1050	3 x Blum plate holders	

Application – plastic containers

Cabinet width KB (mm)	Nominal length NL (mm) 450	500	550	–	–
275	1 x cross divider				
300					
400					
450	1 x cross divider, 2 x lateral dividers				
500					
550					
600					
800	1 x cross divider, 3 x lateral dividers				
900					
1000					
1200					

Application	Nominal length NL (mm) 600	650
SPACE CORNER	1 x cross divider, 2 x lateral dividers	

Application – waste bin pull-out | cleaning agents

Cabinet width KB (mm)	Nominal length NL (mm) 450	500	550	–	–
900–1200	1 x bottle rack, 2 x dividing wall, 3 x cross divider	1 x bottle rack, 2 x dividing wall, 4 x cross divider	1 x bottle rack, 2 x dividing wall, 5 x cross divider		

Application – spices

Cabinet width KB (mm)	Nominal length NL (mm) 450	500	550	–	–
300	2 x spice holders, 1 x cross divider			2 x spice holders, 2 x cross divider	
400					
450	2 x spice holders, 1 x cross divider, 2 x lateral dividers			2 x spice holders, 2 x cross divider, 3 x lateral dividers	

Application – bottles

Cabinet width KB (mm)	Nominal length NL (mm) 450	500	550	–	–
275	–	1 x bottle rack, 4 x cross divider		1 x bottle rack, 5 x cross divider	
300	1 x bottle rack, 3 x cross divider				

Recommendation for high fronted pull-out | inner pull-out

Application – bottles | cutting boards

Cabinet width KB (mm)	Nominal length NL (mm) 450	500	550	–	–
400	1 x bottle rack, 1 x dividing wall, 3 x cross divider	1 x bottle rack, 1 x dividing wall, 4 x cross divider		1 x bottle rack, 1 x dividing wall, 5 x cross divider	
450					
500					
550	1 x bottle rack, 2 x dividing wall, 3 x cross divider	1 x bottle rack, 2 x dividing wall, 4 x cross divider		1 x bottle rack, 2 x dividing wall, 5 x cross divider	
600					
800					
900					
1000					
1200					
Not suitable for inner pull-out!					

Application – pots | lids | pans | cooking utensils

Cabinet width KB (mm)	Nominal length NL (mm) 450	500	550	–	–
600	1 x cross divider, 2 x lateral dividers	2 x cross divider, 3 x lateral dividers			
800	1 x cross divider, 3 x lateral dividers	2 x cross divider, 6 x lateral dividers			
900					
1000					
1200					

Application – baking trays | tins

Cabinet width KB (mm)	Nominal length NL (mm) 450	500	550	–	–
300	1 x dividing wall				
400	2 x dividing wall				
450					
Starting at 500	3 x dividing wall				
Not suitable for inner pull-out!					

Inner dividing systems

Reference pages

Overview	541
ORGA-LINE for TANDEMBOX antaro – cross divider	550
ORGA-LINE for TANDEMBOX antaro – cross gallery	551
ORGA-LINE kitchen accessories	554

Assembly, removal and adjustment

Short URL
www.blum.com/a530

Small accessories, big impact

The practical ORGA-LINE kitchen accessories also make many kitchen tasks easier and organise interiors. With the spice holder, foil dispenser and much more, you have everything that you need close at hand. And when cooking is done, they can be quickly stored away. For ORGA-LINE organisation that also looks beautiful.

Foil/film dispenser
Plastic film without any creases – child's play with our dispenser. The secret: The Blum dispenser rod.

Knife holder
Whether large or small – the knife holder can safely hold up to 9 knives.

Blum plate holder
The infinitely adjustable Blum plate holder can safely accommodate up to 12 plates in the pull-out and can also be easily transported.

Spice holder
The ORGA-LINE spice holder provides safe and well-organised storage for your spices.

Film dispenser

- Dispenser rod for crease-free removal
- Plastic film neatly stored
- Antislipping device through flexible base fixing bracket
- Removable
- Suitable for TANDEMBOX antaro drawers and inner pull-out, height M and K

Order information

Version	Colour	Material	Part no.
●	RAL 7037 dust grey	Nylon	ZSZ.01F0
–			ZSZ.01F1

Version	
●	With cling film
–	Without cling film

Dimensions	
Length (mm)	411
Width (mm)	88.5

Reference pages

Assembly, removal and adjustment

Short URL
www.blum.com/a540

Foil dispenser

- Aluminium foil neatly stored
- Antislipping device through flexible base fixing bracket
- Removable
- Suitable for TANDEMBOX antaro drawers and inner pull-out, height M and K

Order information

Version	Colour	Material	Part no.
●	RAL 7037 dust grey	Nylon	ZSZ.02F0
–			ZSZ.02F1

Version	
●	With aluminium foil
–	Without aluminium foil

Dimensions	
Length (mm)	411
Width (mm)	88.5

Reference pages

Assembly, removal and adjustment

Short URL
www.blum.com/a540

Knife holder

- Safe accommodation of four large and five small knives
- Incl. handle support for long knives
- Antislipping device through base fixing bracket
- Dishwasher-proof up to +65°C
- Suitable for TANDEMBOX antaro drawers and inner pull-out, height M and K

Order information

Colour	Material	Part no.
RAL 7037 dust grey	Nylon/stainless steel	ZSZ.02M0

Dimensions	
Length (mm)	260
Width (mm)	177.5

Reference pages

Assembly, removal and adjustment

Short URL
www.blum.com/a540

Blum plate holder

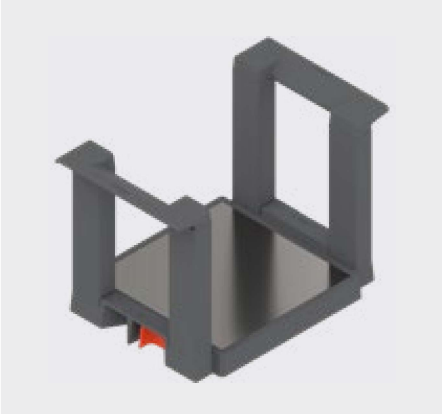

- Safe accommodation of up to 12 plates
- Can be infinitely adjusted to suit plate size
- Removable
- Suitable for TANDEMBOX antaro high fronted pull-out and inner pull-out, height C and D

Order information

Colour	Material	Part no.
Orion grey matt	Nylon/stainless steel	ZC7T0350

Dimensions	
Diameter of plates (mm)	186–322
Stacking height of plates (mm)	146
Overall height (mm)	170

Reference pages

Assembly, removal and adjustment

Short URL
www.blum.com/a540

Spice holder

- Antislipping device through flexible base fixing bracket
- Removable
- For a variety of spice container sizes
- Suitable for TANDEMBOX antaro high fronted pull-out and inner pull-out, height C and D
- Colour: RAL 7037 dust grey
- Material: nylon/stainless steel

Order information

Cabinet width KB (mm)	Width (mm)	Part no.
300	212	ZFZ.30G0I
400	312	ZFZ.40G0I
450	362	ZFZ.45G0I

Reference pages

Assembly, removal and adjustment

Short URL

www.blum.com/a540

Kitchen accessory set

Kitchen accessory set, consisting of:

- 1 x film dispenser
- 1 x foil dispenser
- 1 x knife holder
- 2 x Blum plate holders
- 2 x spice holders for cabinet width KB 300 mm

Order information

Version	Part no.
With cling film and aluminium foil	ZOU.30U1I